MACK®
vocational

TerraPro
LOW ENTRY
6x4
LEU613

- Refuse

STANDARD POWERTRAIN SPECIFICATIONS

ENGINE: MACK MP7-325M
Peak Horsepower – 325HP at 1500-1900 RPM
Horsepower – 300 HP at 2100 Gov. RPM
Max. Torque – 1200 lb/ft at 1100-1300 RPM
V-MAC IV – Total Vehicle Electronics
Air Compressor – 636 (37.4 cfm)
Air Cleaner – 15" Single Element w/Snorkel Intake
Air Intake In-Line Pre-Cleaner
Alternator, Delco 12V 130A (24SI)
Batteries, (3) Mack 12V 650/1950 CCA Threaded Stud Type
Coolant Protection, -34°F (-37°C)
Mack Coolant Conditioner
Diesel Particulate Filter – Vertical LH Side Back of Cab
w/vertical SCR RH Side Back of Cab
Exhaust After Treatment System – Ceramic Non-Catalyzed
Engine Block Heater – 120V 1500W
Silicone Engine Hoses and Tubing
Fan Drive, Electronically Modulated Type
Flywheel Housing, Aluminum
Fuel-Water Separator - Mack
Silicone Radiator & Heater Hoses
Starter, 12V Gear Reduction
Electronic Starter Interlock
Tether Device

TRANSMISSION: ALLISON 4500-RDS-6
6-Speed Automatic, Ratios: 4.70 Low – 0.67 High
Includes: Direct Mount Oil Cooler, External Oil Cooler,
Internal Filter and Oil Level Sensor
Main Driveline: Meritor 17N HD w/Coated Splines
Interaxle Driveline: Meritor 17N HD w/Coated Splines

SPECIFICATIONS

STANDARD POWERTRAIN SPECIFICATIONS *(Continued)*

REAR AXLE: MACK S462
46,000 lb Capacity
Tires – 11R22.5 Duals
Carrier – CRDP150/151
Wheels – Steel Disc (8) 22.5 x 8.25 10-Hole Hub Piloted
Brakes: Meritor "S" Cam 16.5" x 7" Q-Plus w/o Dust Shields
Brake Drums Cast Outborad Mounted
Rear Wheel Seals
Raised Rear Brake Chambers
Shock Insulators
Slack Adjusters – Automatic
Suspension – SS462 Mack Multileaf 46,000 lb Capacity
Spring Brake Chambers – (4) 30/30 Double Diaphragm Type Mechanical Spring Release
Transverse Torque Rod (Rear Axle Only)
Trunnion Bushing

FRONT AXLE: MACK FXL20
20,000 lb. Capacity
Tires – 315/80R22.5
Wheels – Steel Disc (2) 22.5" x 9.0" 10-Hole Hub Piloted
Brakes: Meritor "S" Cam 16.5" x 6" Q-Plus w/o Dust Shields
Brake Drums Cast Outborad Mounted
Slack Adjusters – Automatic
Suspension – Mack Taperleaf 20,000 lb. Ground Load Rating
Static Load Cushions
Steering – M100P Plus Right Side Assist Cylinder

STANDARD CAB INTERIOR/EXTERIOR SPECIFICATIONS

CAB: LOW ENTRY LH DRIVE w/RH Operating Position
Air Restriction Monitor, Graduated Lock Up Type (Air Cleaner Intake Mounted)
Ash Tray w/Hinged Cover
Cab Mounting, Four Point Fixed Type
Cab Tilt, Mounted on RH Fender Bracket
Cigar Lighter
Coat Hook
Dome Lights – 2 w/Self-contained Switch
Doors – RH Rear Opening Fold Up Door and LH Door w/Roll-up Window
Engine Shutoff – Key Type Control
Gauges – Dual Air Pressure, Voltmeter, Engine Coolant Temperature, Engine Oil Pressure, Fuel Level, Speedometer, Tachometer, Transmission Oil Temperature
Gear Shift w/Neutral-to-Range Inhibit
Grab Handles, Aluminum RH & LH Behind Door
Heater w/Integral Defroster
Horn – (1) Twin Trumpet Mounted Under Cab Single Tone w/Snow Shield
Identification and Clearance Lights (7)
Interior Trim – Silver Gray Vinyl
Keys, 2 – Keyed at Random
Low Pressure Indicator Light and Buzzer
Exterior Mirrors – LH and RH Motorized w/Heated Retractable Arms and Brackets
Front Fender Mounted Mud Flaps
Parking Brake Control w/Warning Light
AM/FM Stereo CD w/Weather Band
CB – 5 way Binding Post
Rear Window, Fixed
Driver Seat – Bostrom Talladega 910 Mid-Back Air Suspension w/Black Dupont Covering
Rider Seat – Mack Fold Up w/ Black Dupont Covering
Seat Belts – Orange, Lap and Shoulder for Driver/Lap for Fold Up Rider Seat
Side Markers – Lamps and Reflectors
Key Type Starter Switch
Steering Column, Fixed
Sun Visor, Interior Both Sides
Turn Signal Switch, Manual Cancelling
Ventilation – LH Door Vent
Windshield Protector
Windshield Washers – Wiper Mounted with 7qt Reservoir
Windshield Wipers – 2 Speed Electric Motor w/Intermittent Feature
Safety Tinted Windshield w/Non-Tinted Side and Rear Windows
Paint – Mack White (Cab), Mack Black (Chassis Runnign Gear)

ADDITIONAL STANDARD SPECIFICATIONS

AIR/BRAKE
Air Lines Chassis – Extruded Nylon Tubing
Dual Air Brake System
Air Dryer - Heated 1800 w/Coalescing Filter
Air Reservoirs – Steel
Bendix Anti-Lock Brake System
Automatic Drain Valve, Heated

SPECIALITY EQUIPMENT
Crankshaft Adapter, 1350 Series Flange
Hydraulic Pump Mtg. Provisions
Work Brake

ELECTRICAL
12 Volt Electrical System
Backup Alarm – Preco Model 1059
Battery Box – Painted Steel w/Locking Tab
Battery Disconnect Switch, Mtd. RH Side of Battery Box
Battery Switch Warning Light
Daytime Running Lights
Electric Circuit Protection Package
Waterproof Electrical Connections
Control Link
Headlights – (2) Single Round Halogen Lamps
Rear Lighting
Single Flasher, Kysor

STANDARD CHASSIS DIMENSIONS

(All measurements are in inches)

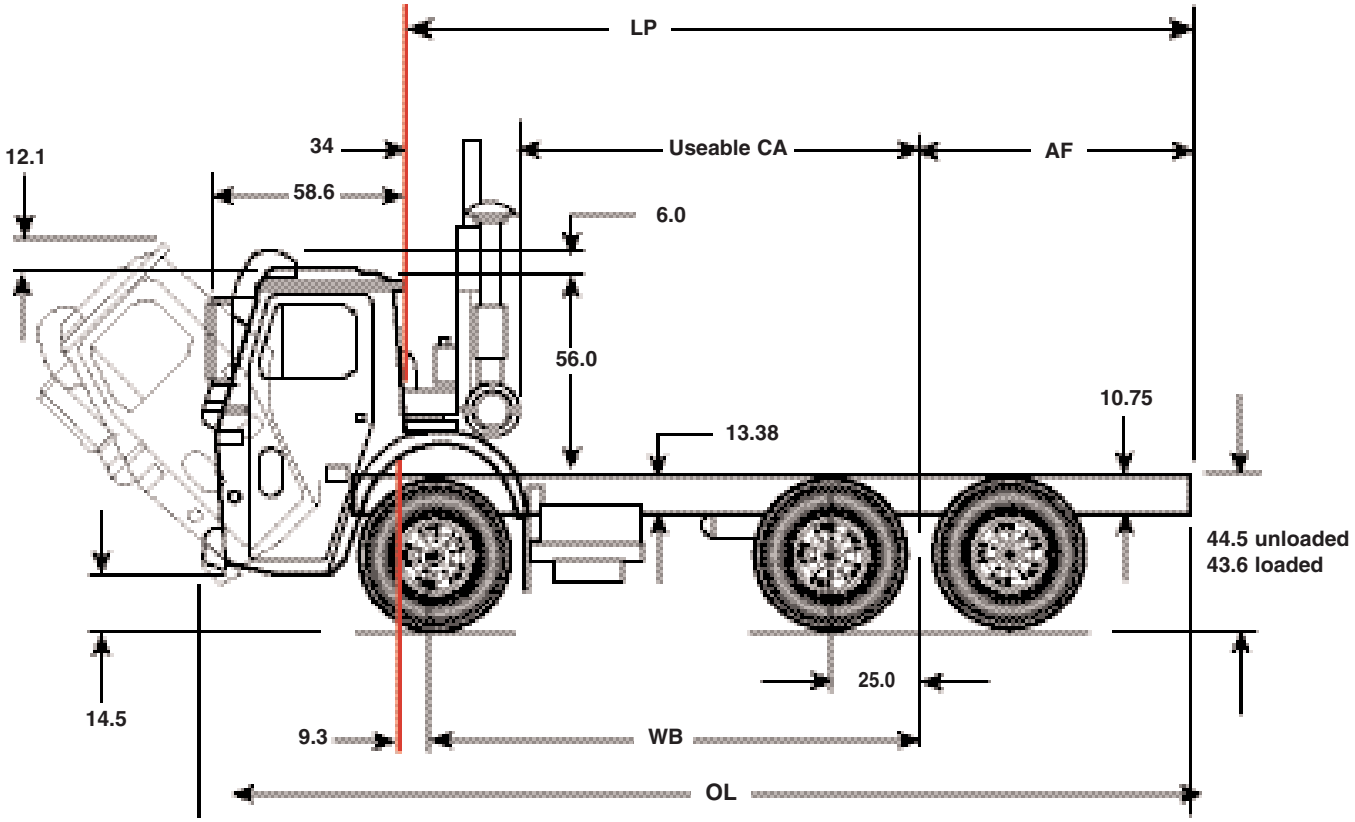

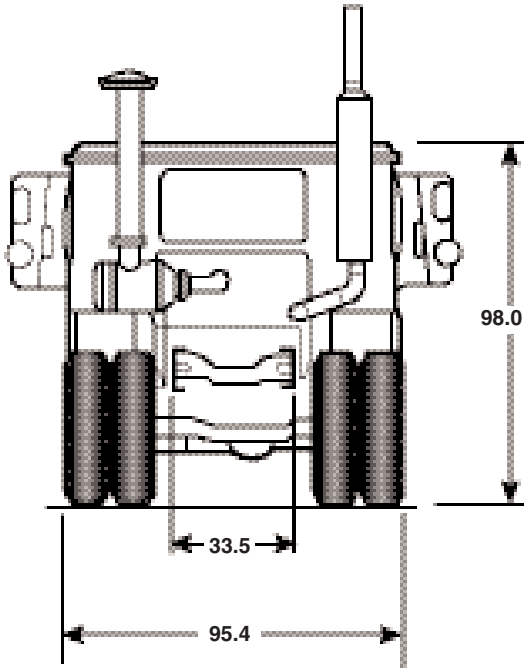

FRAME
Frame Rails – 13.38" x 3.25" x .38" Steel
Section Modulus, 23.49 in.^{3}
RBM (per rail) – 2,818,800 lb. in.
Bumper – Painted Steel Flush Mounted
Bumper to Back of Cab (BBC) – 59"
Crossmembers – 1/2" Plate Type Bolted Back of Cab Intermediate 1/8" Below Rail
Front Tow Pin
Fuel Tank – 70 Gallon RH Steel 26" x 24" Rectangular
Fuel Lines, Areoquip Fire Resistant
Filler Neck Screens
Diesel Exhaust Fluid (DEF) Tank - 11.8 Gallon, 22" Diameter, Frame Mounted on RH Side

STANDARD WHEELBASE/LOAD PLATFORM
For standard wheelbase and load platform information refer to your current version of MACKTRAQ"

DROP FRAME

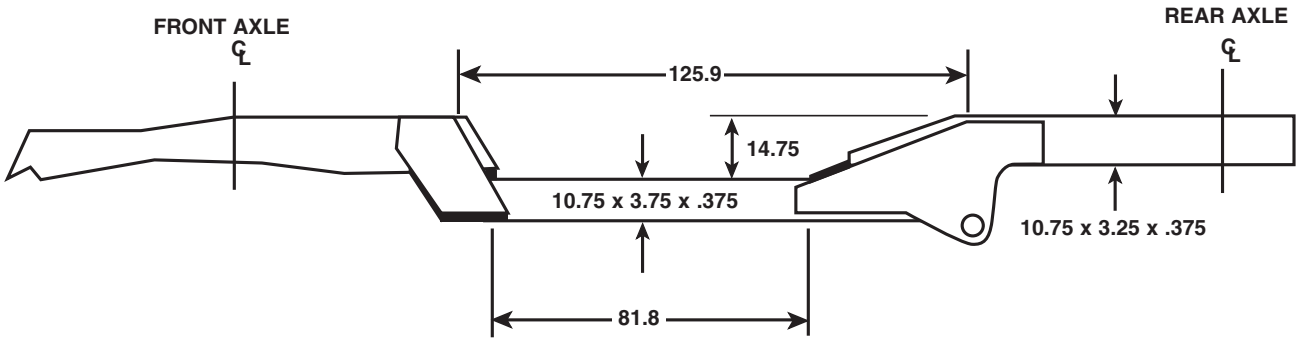

WB WHEELBASE	LP PLATFORM	USEABLE CA	AF
250	320	“Drop Frame”	61
173	286	152.3	104
186	286	165.3	91
197	286	176.3	80
210	286		67
246	322		67

AVAILABLE DRIVELINE COMPONENTS

TRANSMISSIONS

MODEL	SPEEDS	RATIOS (LOW/HIGH)
ALLISON		
4500 RDS	5	4.70/0.76
4500 RDS	6	4.70/0.67

MP7—ENGINES

MODEL	HORSEPOWER
MACK	
MP7-345C	345 HP [257 kW] @ 1500-1700 RPM 320 HP [239 kW] @ 1950
MP7-325M	325 HP [242 kW] @ 1500-1900 RPM 300 HP [224 kW] @ 2100

AXLES

CAPACITY	MAKE	MODEL
FRONT AXLES		
20,000 lb. [9 072 kg]	MACK	FXL20
REAR AXLES		
38,000 lb. [17 237 kg]	MACK	S38R
46,000 lb. [20 866kg]	MACK	S462
	MERITOR	RT46-160
52,000 lb. [23 600kg]	MACK	S522

A SALES ENGINEERING PUBLICATION

The information in this brochure was accurate as of the date of the publication. Illustrations may not be representative of current product. Mack Trucks, Inc. reserves the right to make changes in specifications, equipment or design, or to discontinue models or options without notice at any time.

©2010 Mack Trucks, Inc.
CHA142 0020931 11B 01/07/2010
Printed in U.S.A.